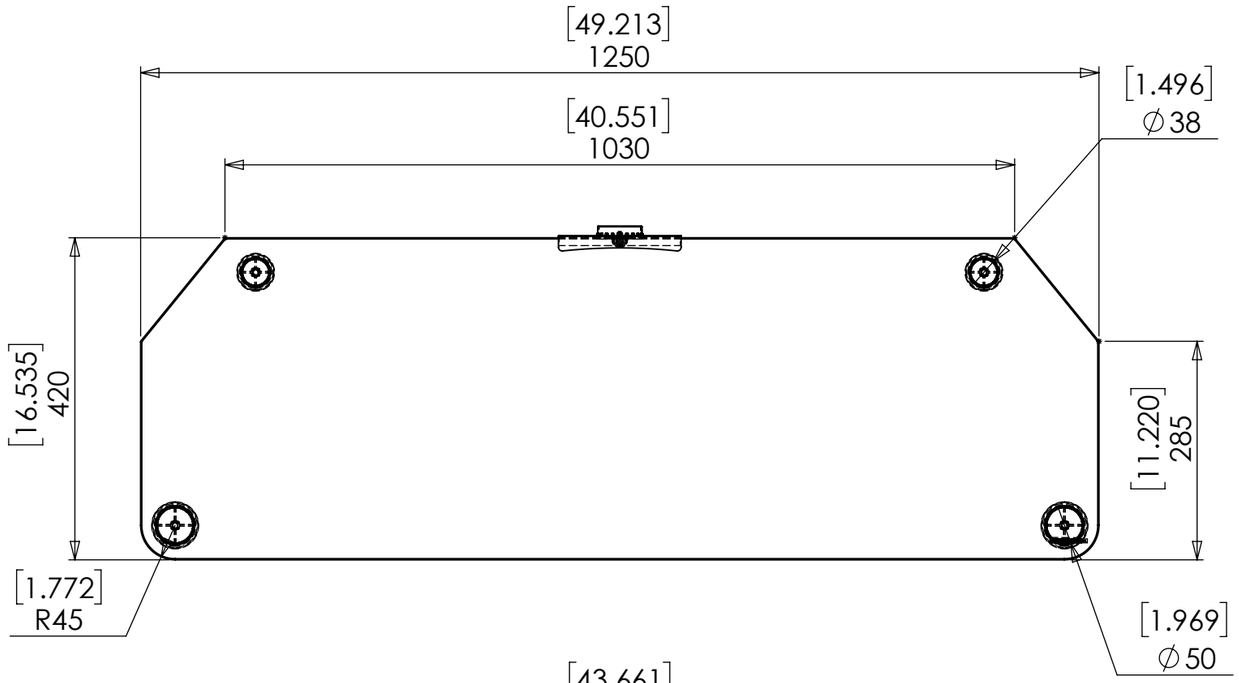

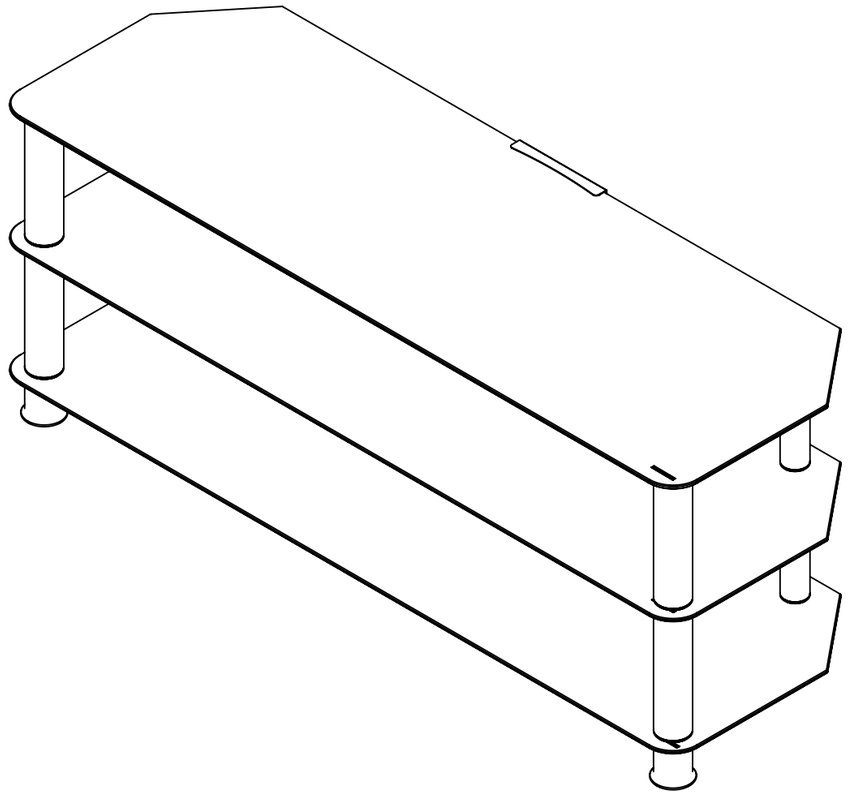

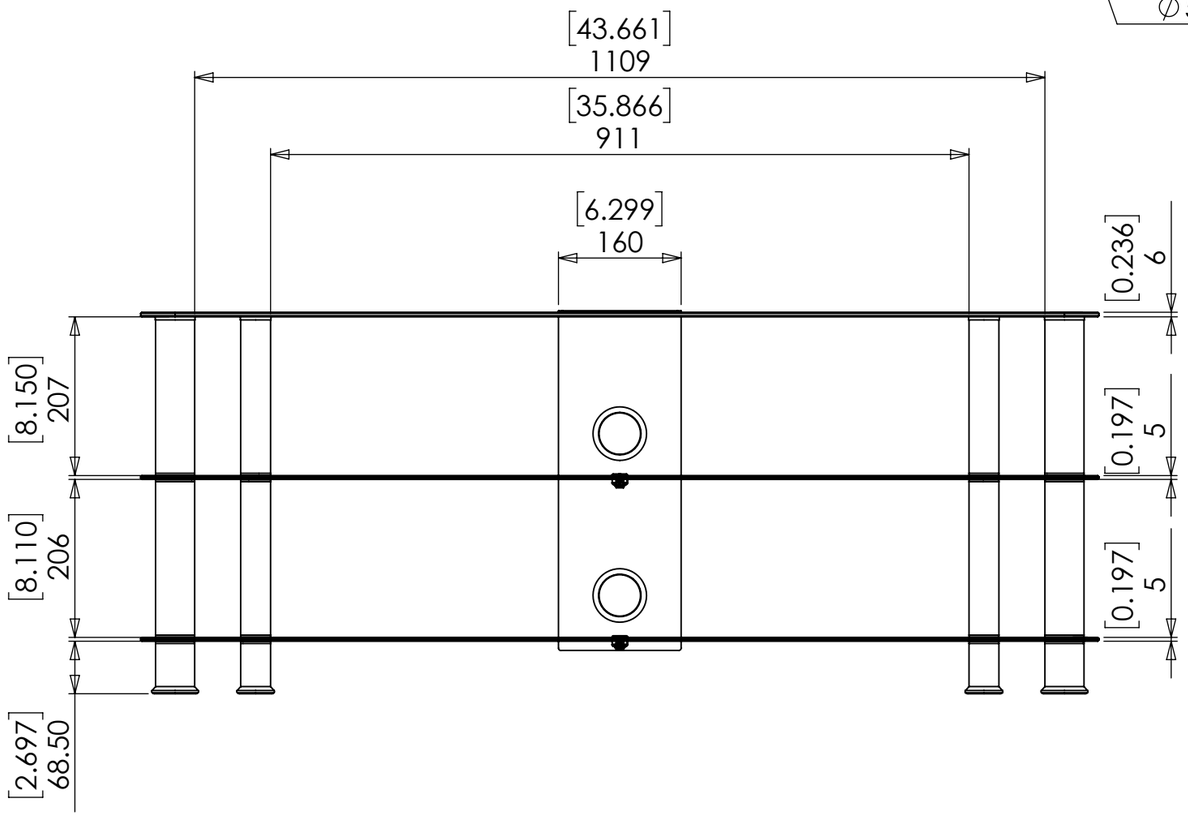

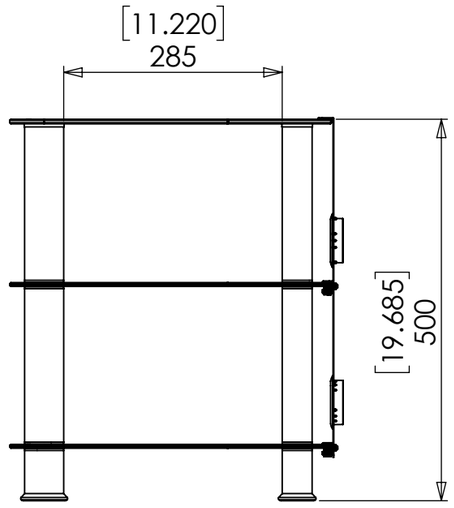

The copyright of this drawing is the property of AVF Group Ltd