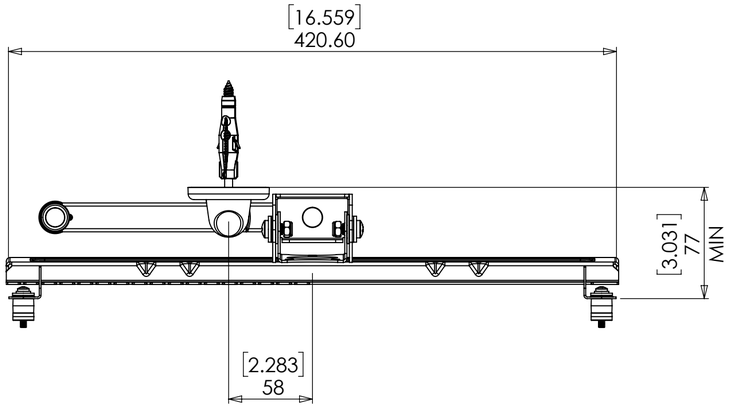

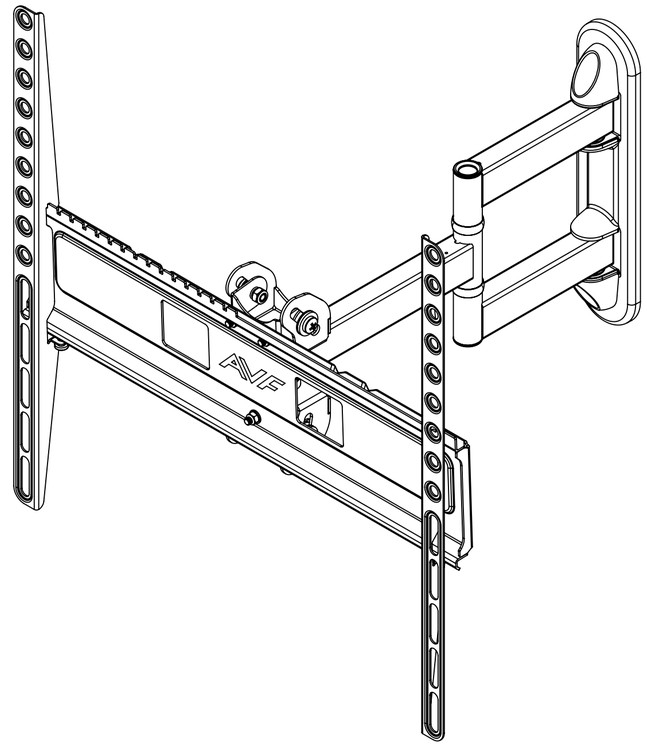

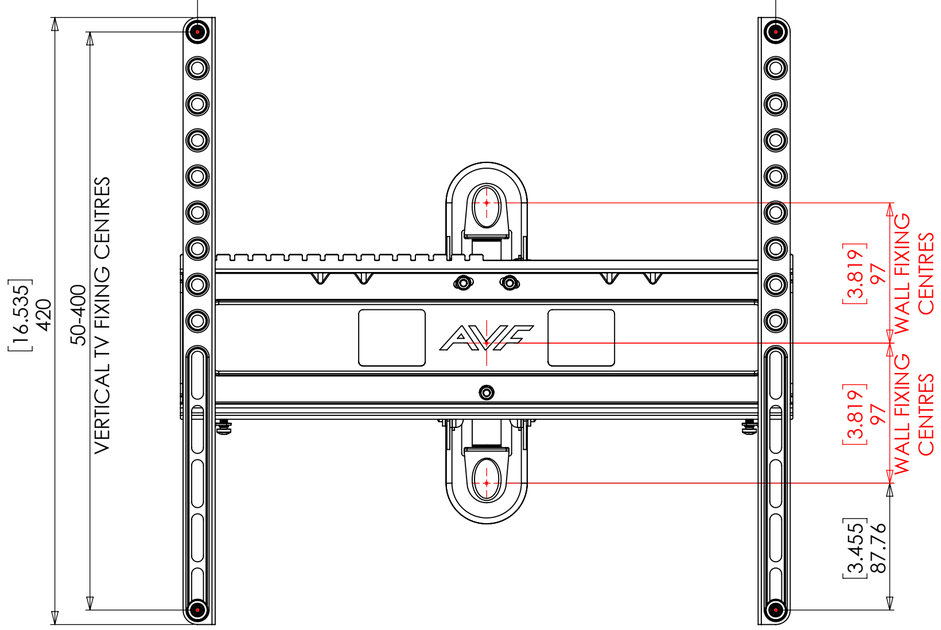

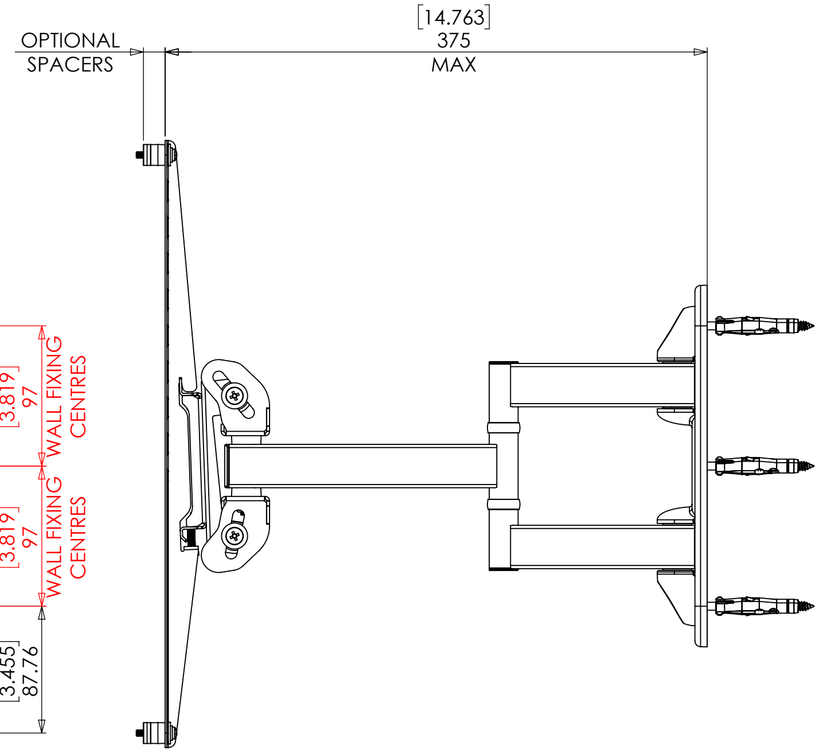

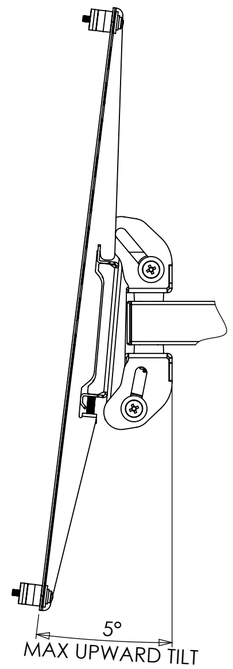

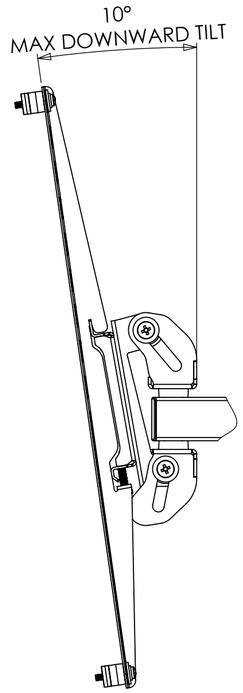

PRODUCT WEIGHT 2335.30 grams
(AS SHOWN WITHOUT PACKAGING AND TV FIXINGS)

The copyright of this drawing is the property of AVF Group Ltd