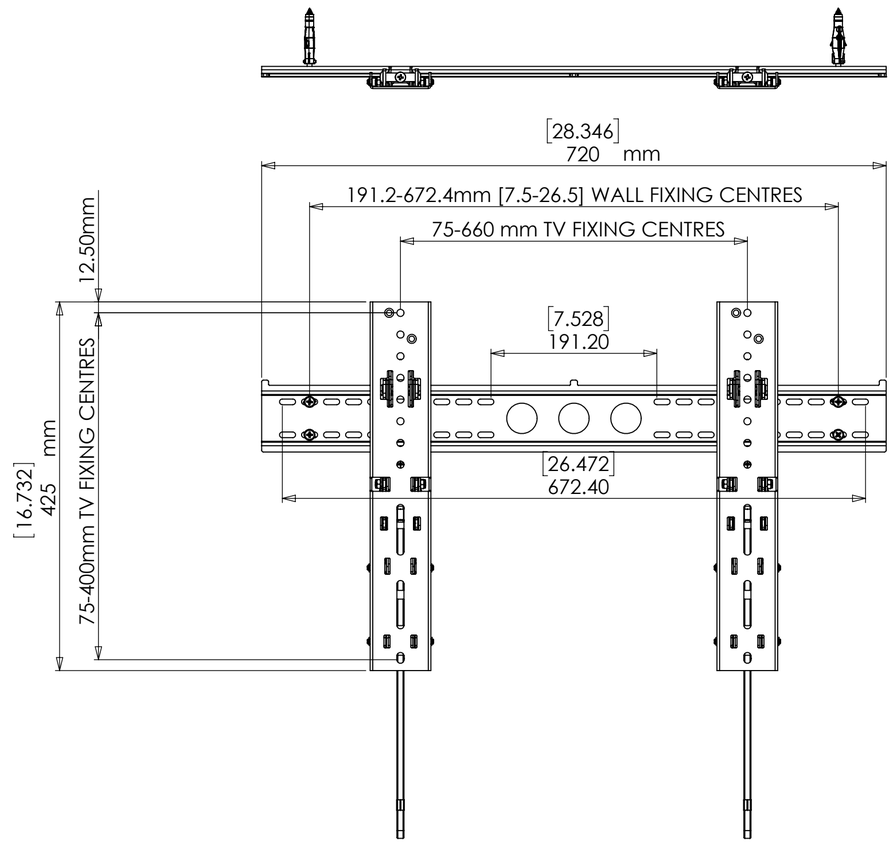

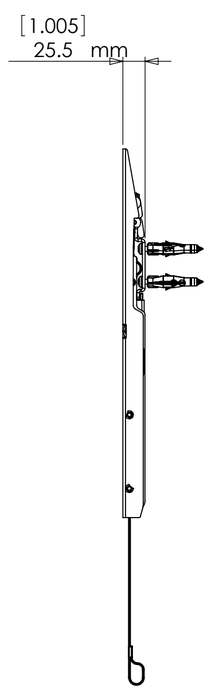

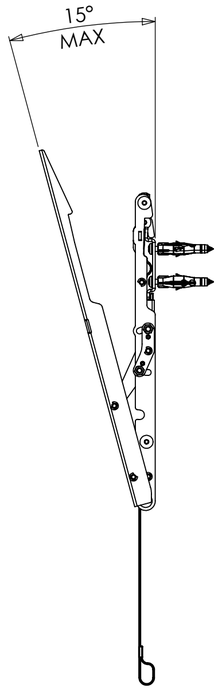

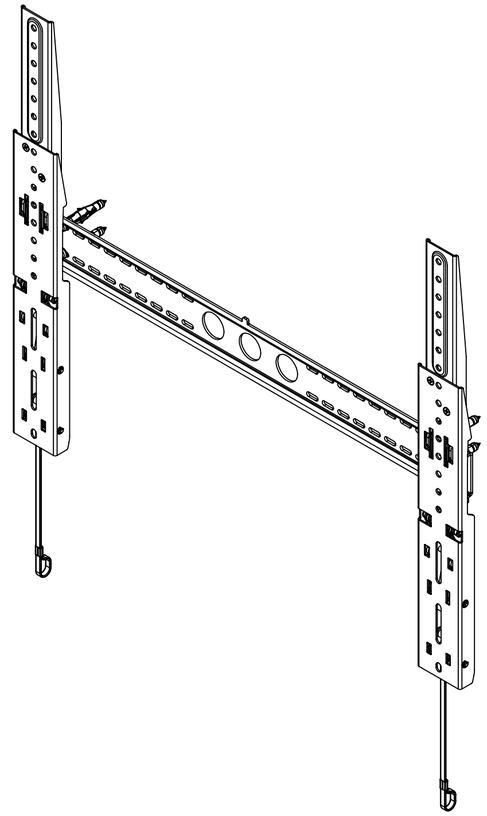

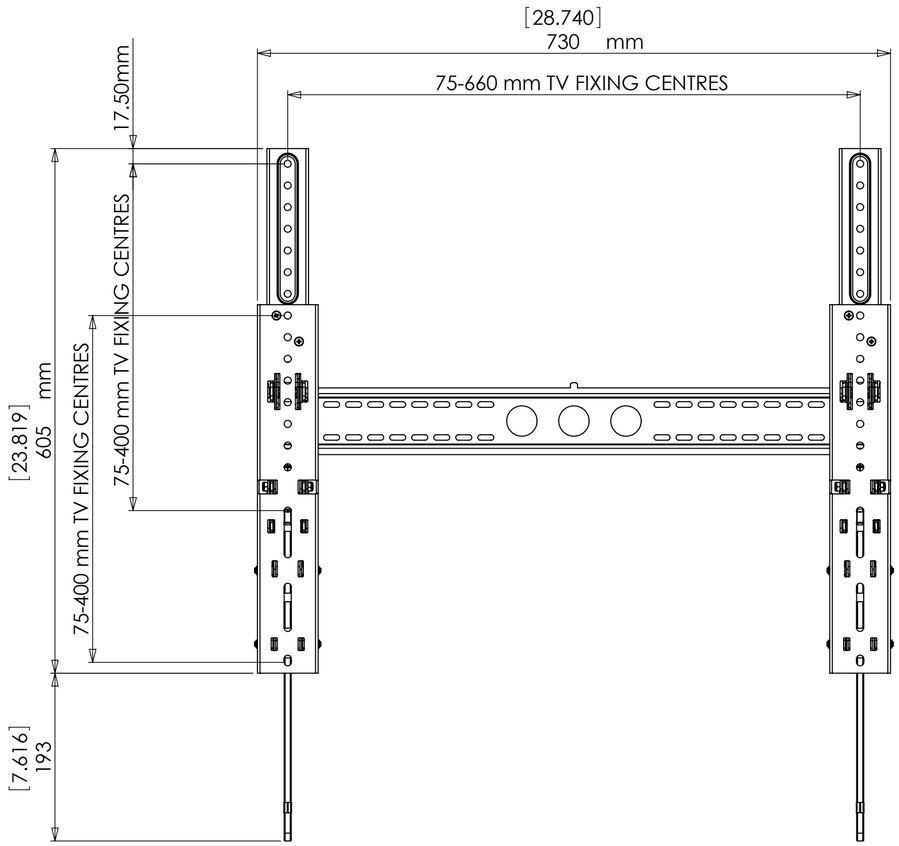

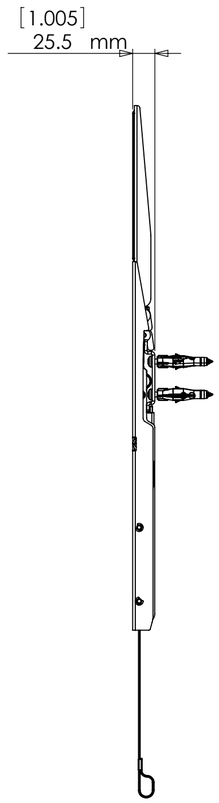

PRODUCT WEIGHT :- 0.00 grams
(WITHOUT PACKAGING OR FIXINGS)

The copyright of this drawing is the property of AVF Group Ltd