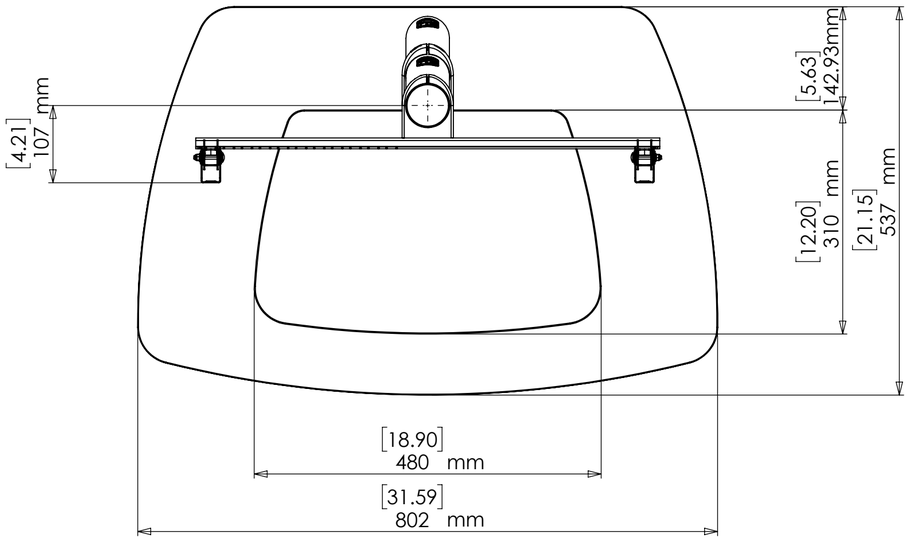


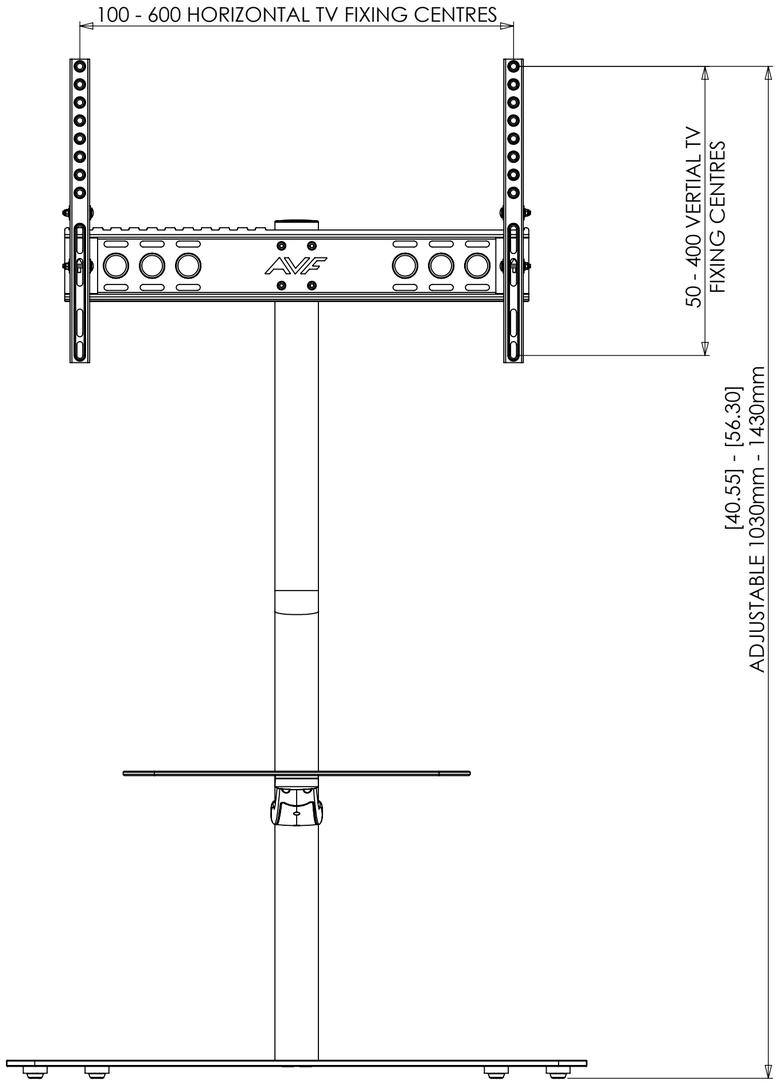


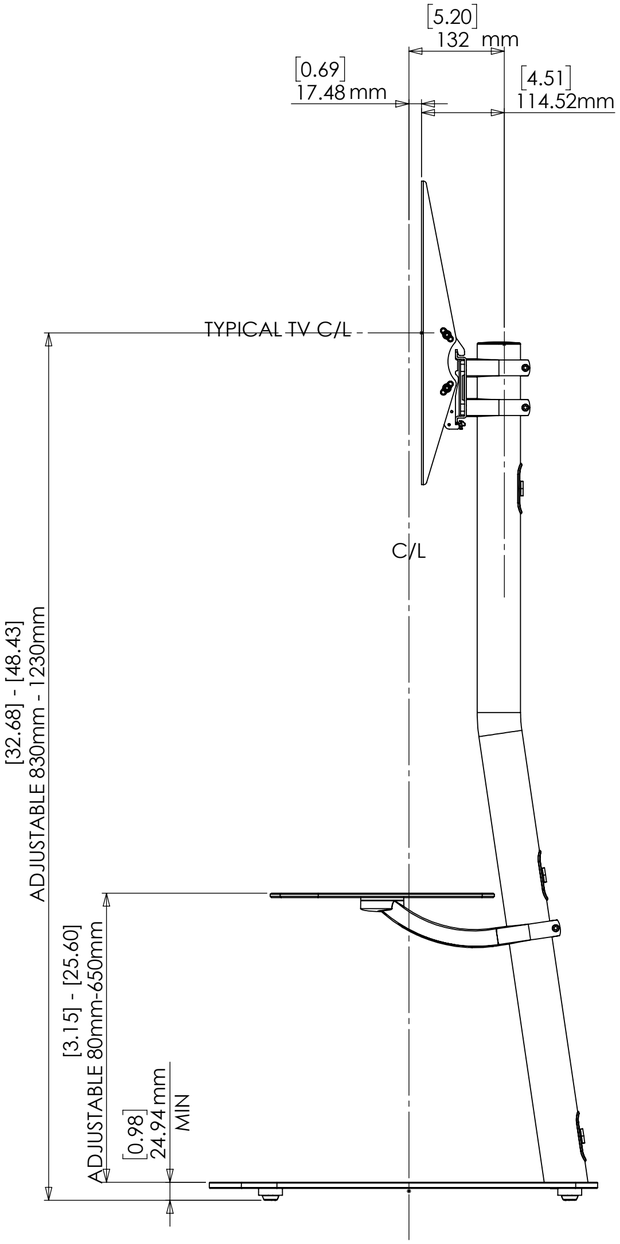


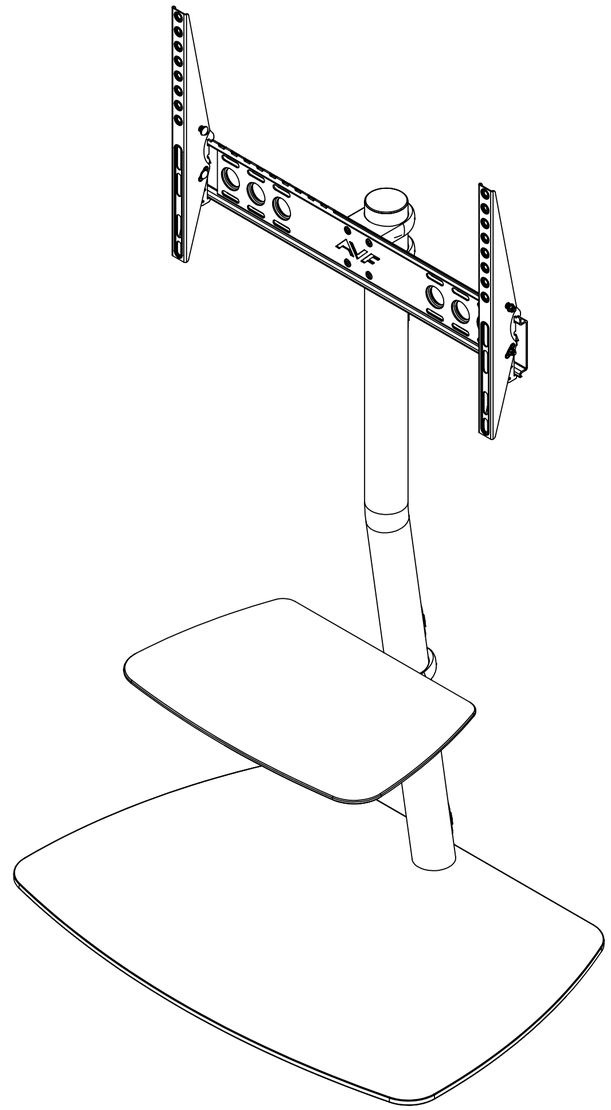

PRODCUT WEIGHT WITHOUT BOX :-28508.52g

The copyright of this drawing is the property of AVF Group Ltd