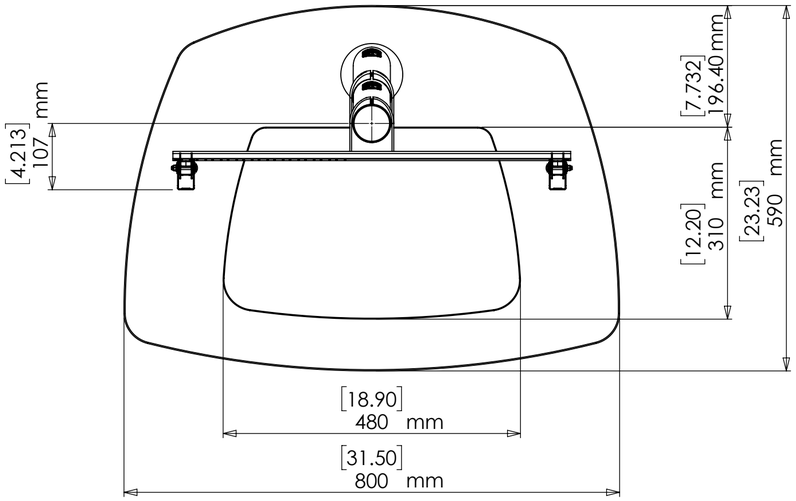

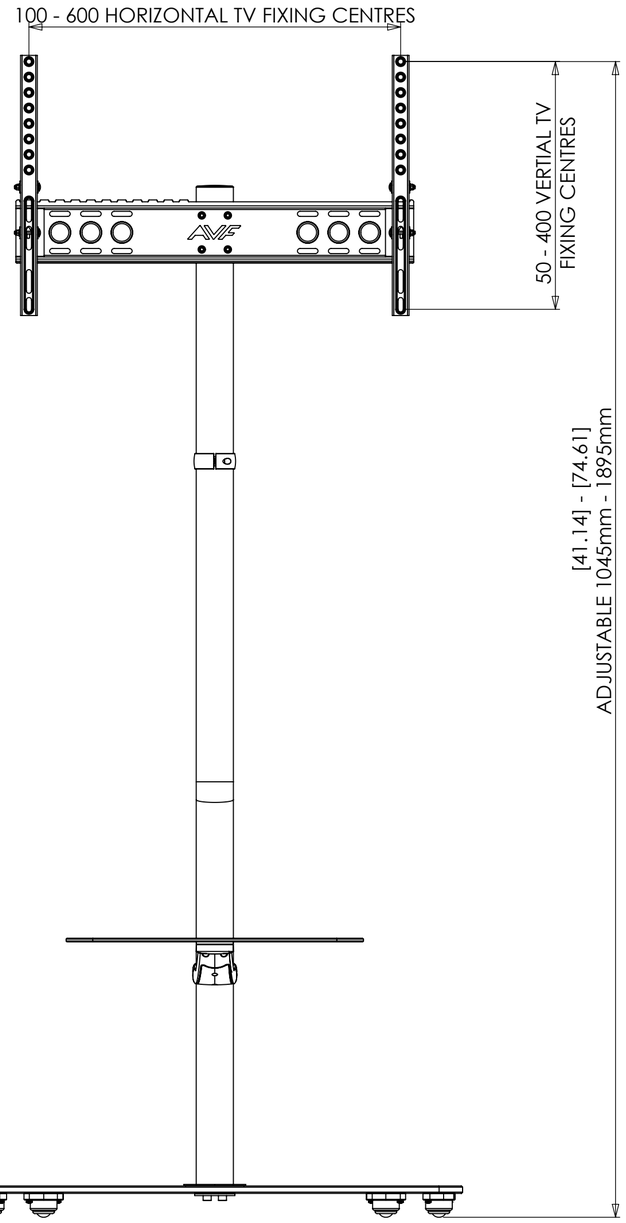

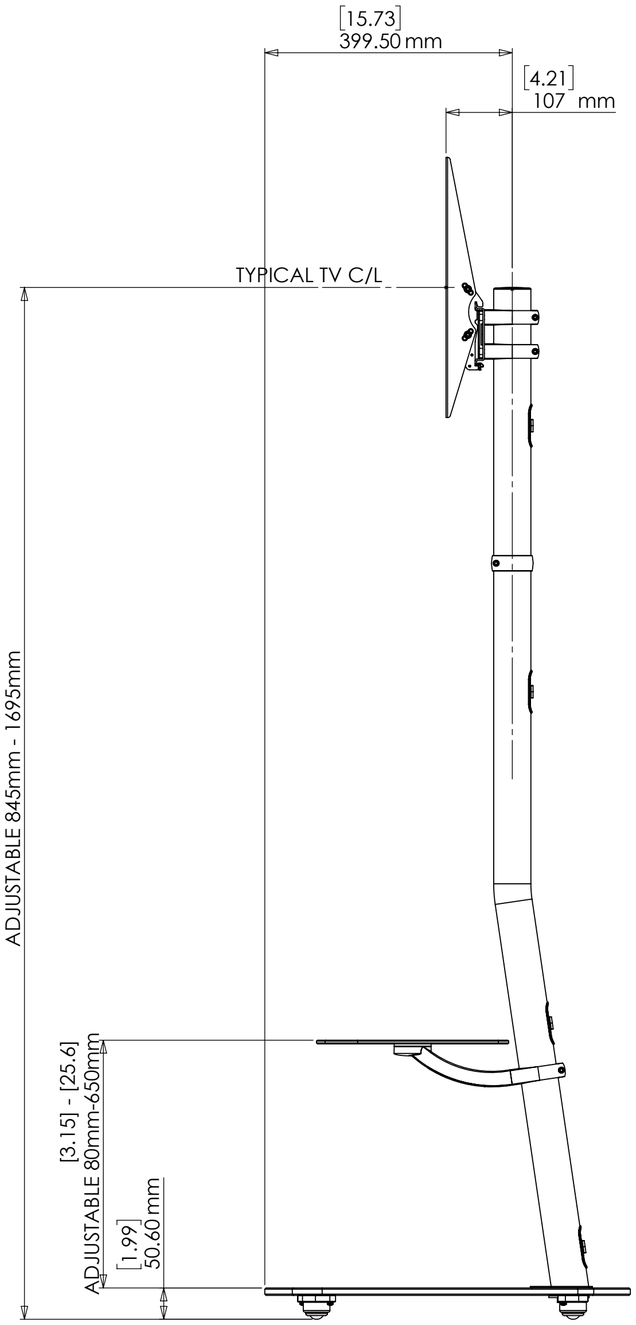

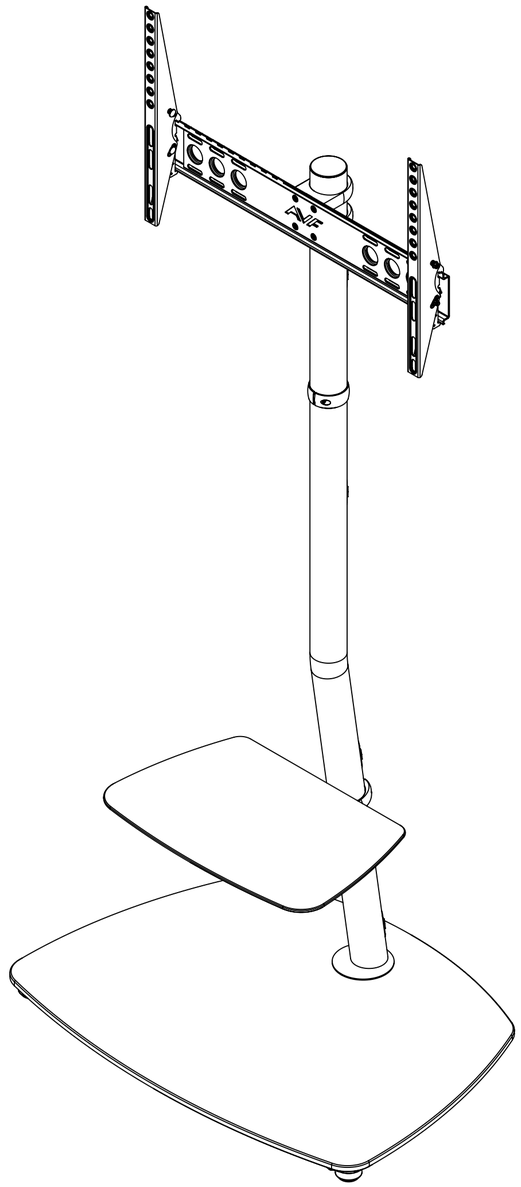

PRODCUT WEIGHT WITHOUT BOX :-25846.24g

The copyright of this drawing is the property of AVF Group Ltd