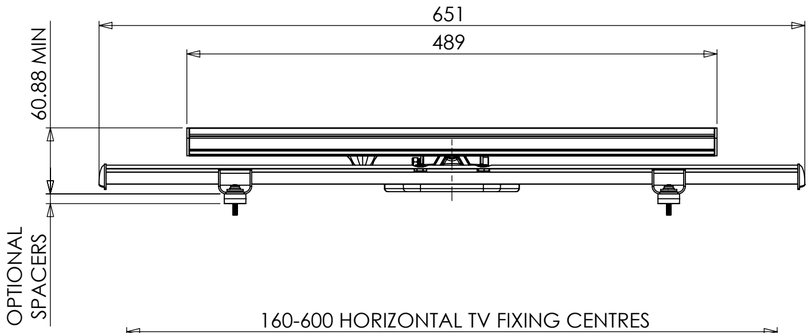

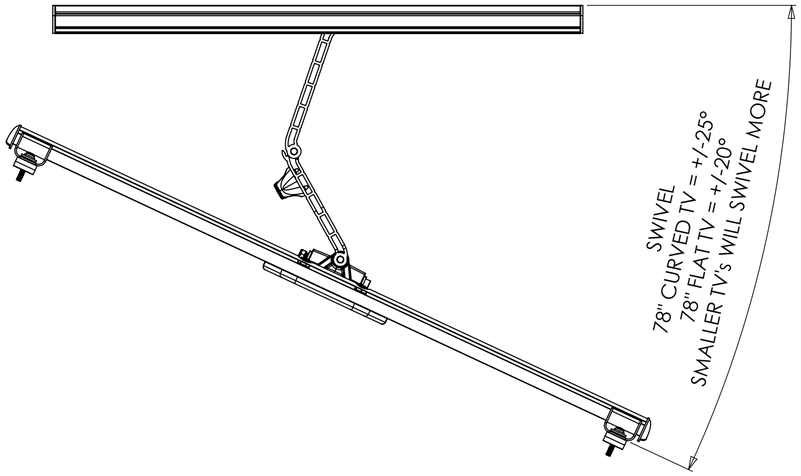

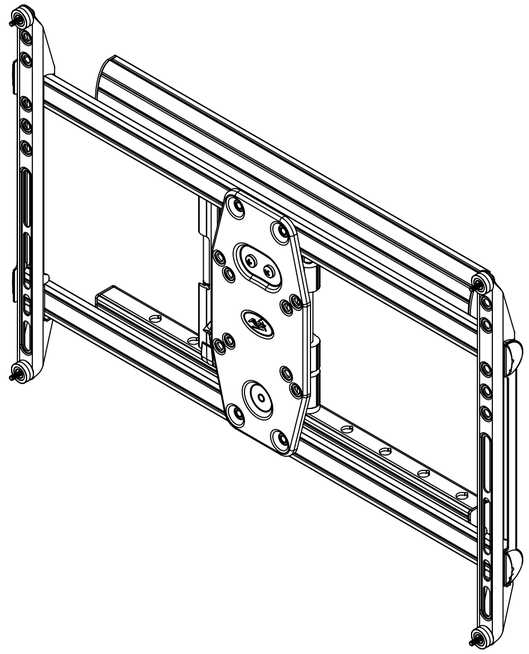

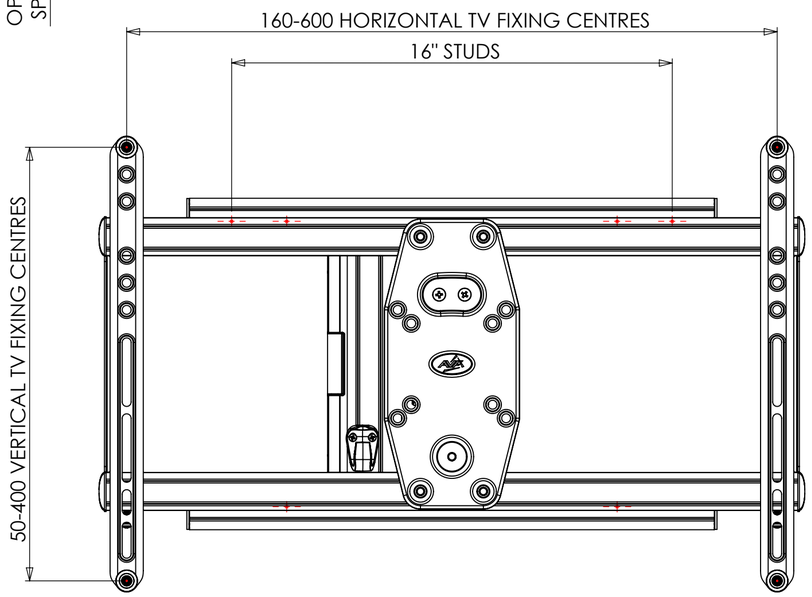

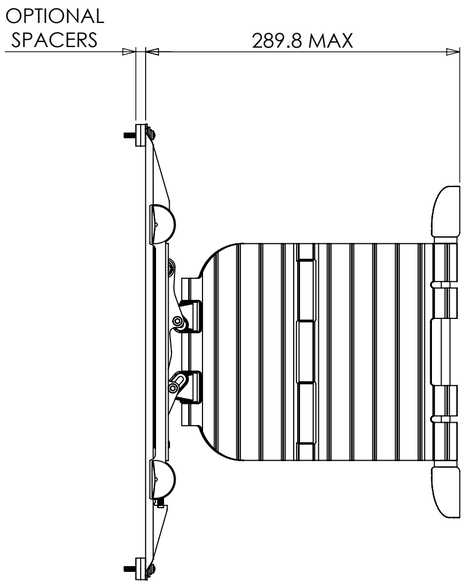

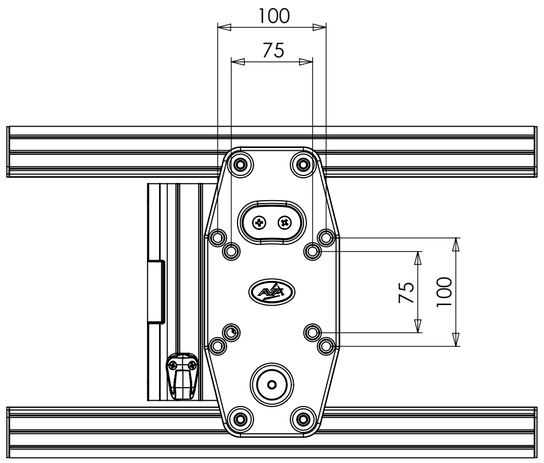

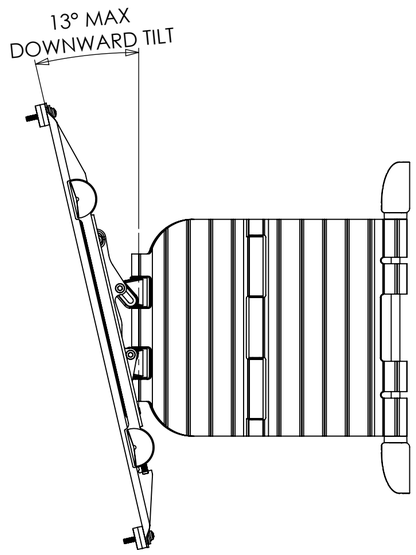

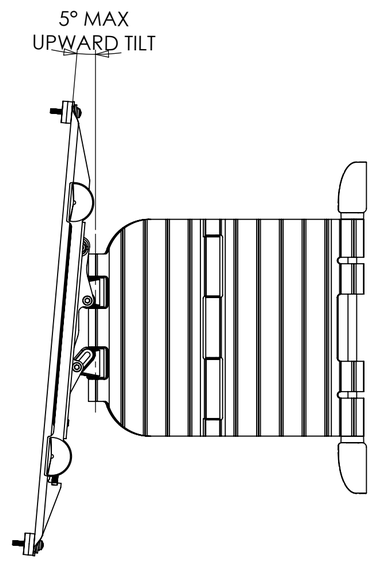

VESA CONFIGURATIONS WITHOUT ARMS

WEIGHT :-4309.73g
AS SHOWN WITHOUT PACKAGING

The copyright of this drawing is the property of AVF Group Ltd