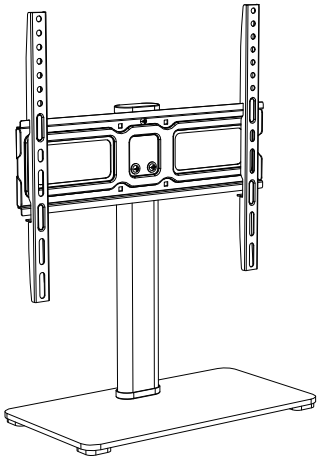

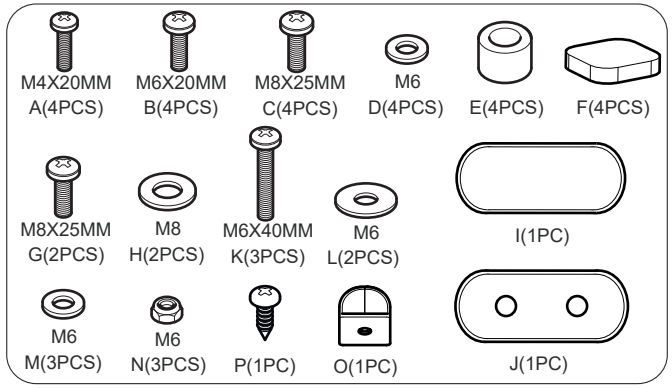

STEP3 Horizontal adjustment

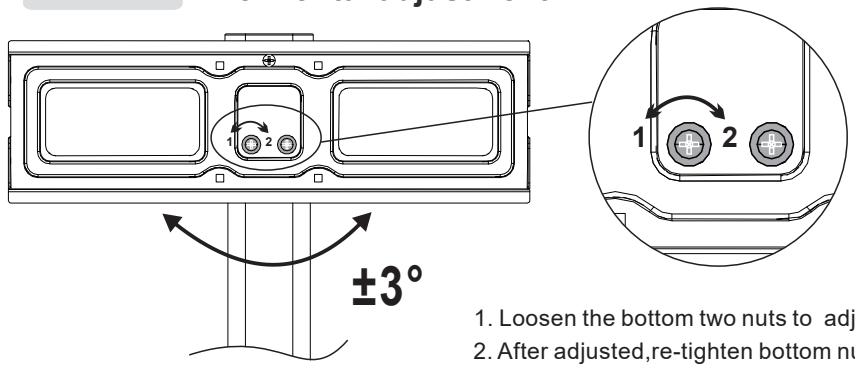

1. Loosen the bottom two nuts to adjust level
2. After adjusted,re-tighten bottom nuts

STEP1

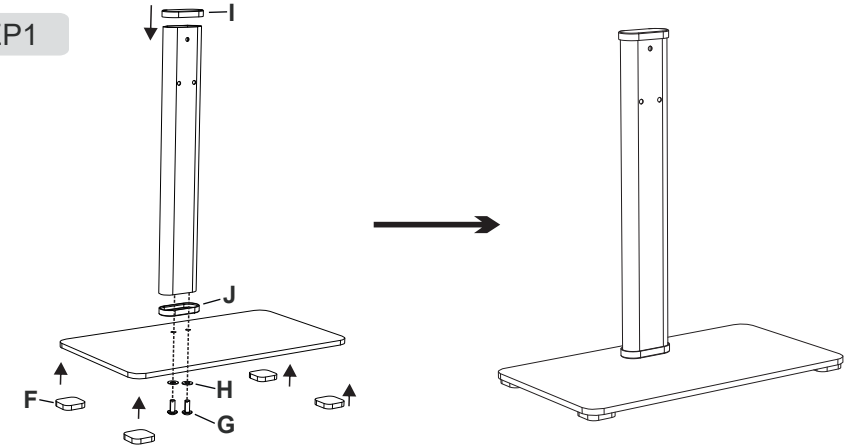

Attaching brackets to screen STEP4 For TVs with a curved back or obstruction

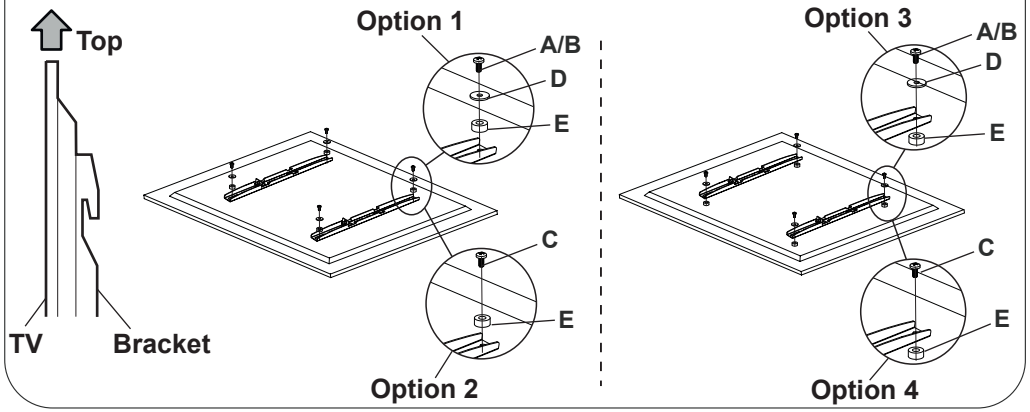

STEP2

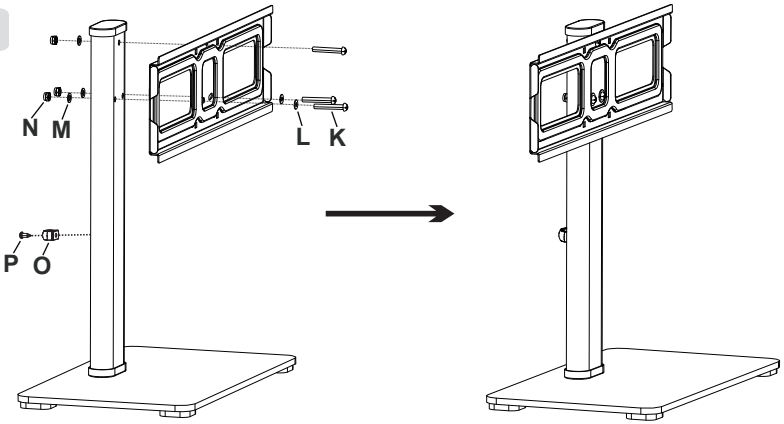

STEP5 Hang the TV onto the wall plate

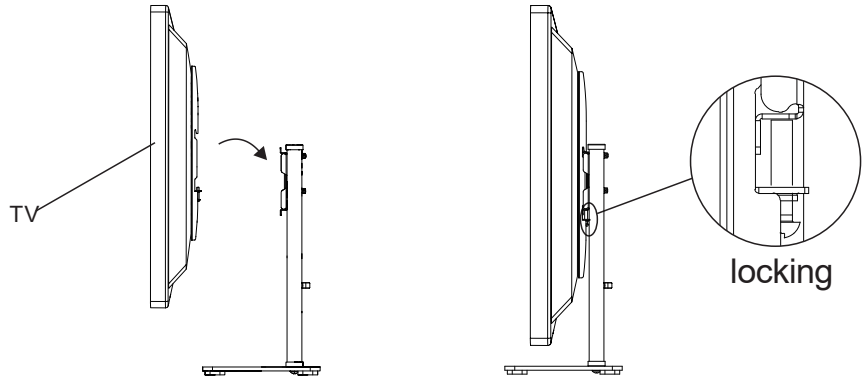

468967 rev00